BECS 22451
Experiment No. 09

# INTRODUCTION TO MATLAB SIMULINK

Student Name : G.P.D Thamara

Student Number : EC/2021/005

Date Performed : 09/12/2024

Date of Submission :10/12/2024

Date: 09/12/2024

Experiment No: 09

Experiment Name: INTRODUCTION TO MATLAB SIMULINK

**APPARATUS**

- A PC or Laptop with MATLAB Simulink installed.

## THEORY AND DIAGRAMS

Simulink is a graphical programming environment in MATLAB that extends the capabilities of MATLAB for modelling, simulating, and analyzing multi-domain dynamical systems. It is widely used in various engineering disciplines for its intuitive and visual approach to system design.

- Simulink is an extension to MATLAB.
- In Simulink, users construct block diagram models for dynamic systems, departing from traditional text-based coding.
- Simulink excels in modelling complex nonlinear systems with ease.
- It has the capability to model both continuous and discrete-time components, enhancing versatility in system representation and analysis.

Figure 1

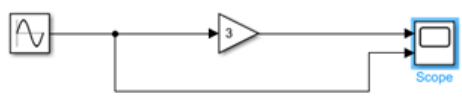


Figure 2

**THEORY AND DIAGRAMS**

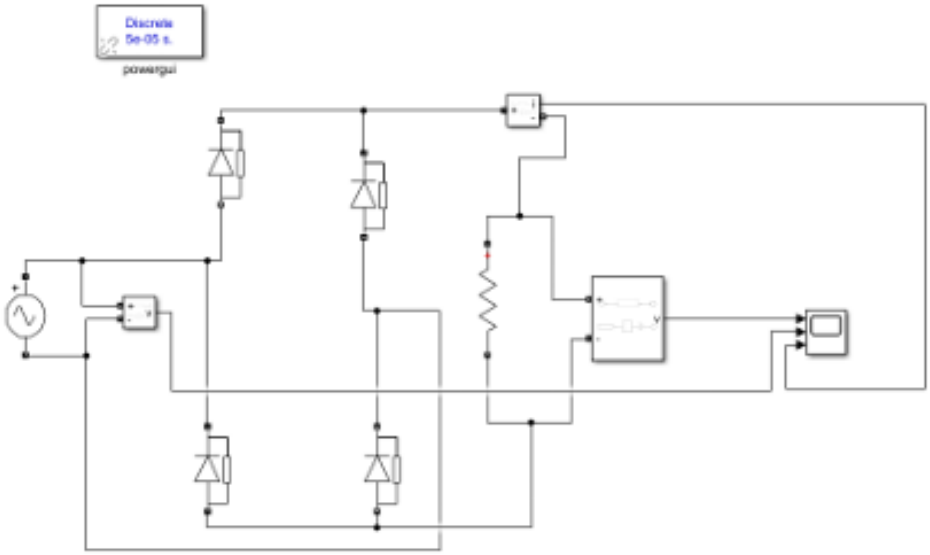


Figure 3

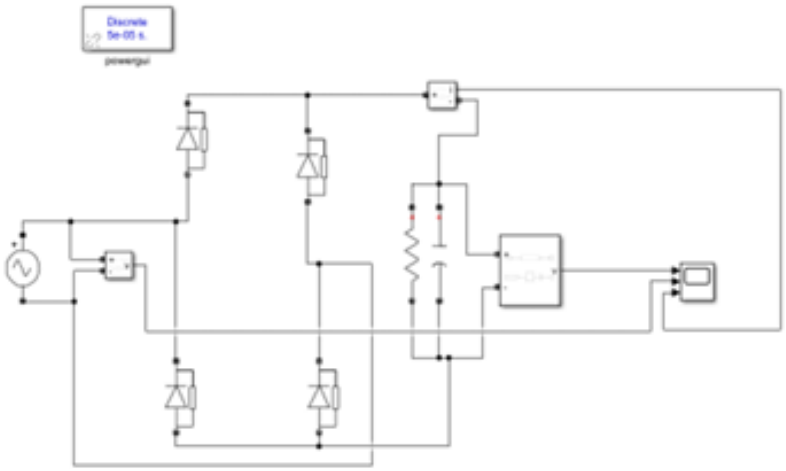


Figure 4

## PROCEDURE

### *Part 01*

1. MATLAB was started, and Simulink was opened by clicking on the “Start Simulink” button. Alternatively, Simulink could have been started by running the command “simulink” in the command window.
2. In the simulation start window, “Blank Model” was clicked, creating a blank Simulink model.
3. The Simulink project was saved as “part_01_A.slx” in a folder named “EC_20XX_XXX.” A Word file was created and renamed with the student number, and it was saved in the same folder.
4. The “Library Browser” button was clicked to open the Simulink Library Browser, which contained all the Simulink components available for models. In the left panel, “Sources” was selected to open the Simulink Source Models, and “Sine Wave” was selected. The model was dragged and dropped to the canvas. The amplitude was set to “1,” although the default value for amplitude was already 1. The model could have been double-clicked to change this value anytime.
5. Components were added by double-clicking on the canvas. The canvas was double-clicked, and “scope” was input to add an output visualizer for viewing the signal generated by the source. “Number of ports” was entered as 1, which could have been changed later from the menu.
6. The source and scope were connected by clicking on the terminal ends.
7. The simulation was run, keeping everything at default, by clicking the “play” button in the top options bar. The scope was double-clicked to view the output waveform.
8. The cursor measurement was clicked, and using the horizontal cursors, the value of the peak-to-peak amplitude was noted. Using the vertical cursors, the periodic time of the waveform was noted.
9. A screenshot of the circuit diagram and waveform was taken and inserted into the created Word file under Part 01-A. The Word file was updated with the amplitude and frequency of the waveform that had been measured.
10. A “gain” block was inserted between the source and scope, and the gain was changed to “3.”
11. The “number of ports” of the scope was changed by double-clicking the scope and navigating to file >> number of input ports >> 2. The second input of the scope was used to observe the input waveform by directly connecting it to the source.
12. The simulation was run, and the output waveform was observed. Cursor measurements were used to measure the parameters of both waveforms as had been done in step (8).
13. The results were recorded in the Word file under Part 01-B as had been done in step (9)

***Part 02***

1. A new project was created in Simulink by navigating to **File >> New >> Blank Model**, and the circuit shown in Figure 6 was designed.
2. Blocks for the circuit were inserted from **Simscape >> Specialized Power Systems >> Fundamental Blocks** on the left-side panel. An **AC Voltage Source** from **Electrical Sources** was used as the power source for the system, and the VRMS value was set to 230V. Diodes were inserted from **Power Electronics**, and the tick for "Show measurement port" was removed to eliminate additional ports, if needed. Current and voltage sources were added from **Measurements**, and a scope was inserted to observe the three outputs.
3. The same procedure was followed, and the circuit shown in Figure 6 was constructed.
4. The **Power gui** block was inserted, and the simulation type was set to **Discrete**.
5. The simulation was run with a 0.05 s stop time, and the three outputs were observed. Step 13 was repeated, and the content was saved under **Part 02-A**.
6. A capacitor with a capacitance of 0.01 μF was inserted in parallel with the load resistor, and the change in waveforms was observed. Step (d) was repeated, and the content was saved under **Part 02-B**.
7. The capacitance was changed to 0.1 μF, and the change in waveforms was observed. Step (d) was repeated, and the content was saved under **Part 02-C**.

## OBSERVATIONS

### *Part 01*

A. Amplitude (peak to peak) = 2

Periodic time = 159.153 mHz

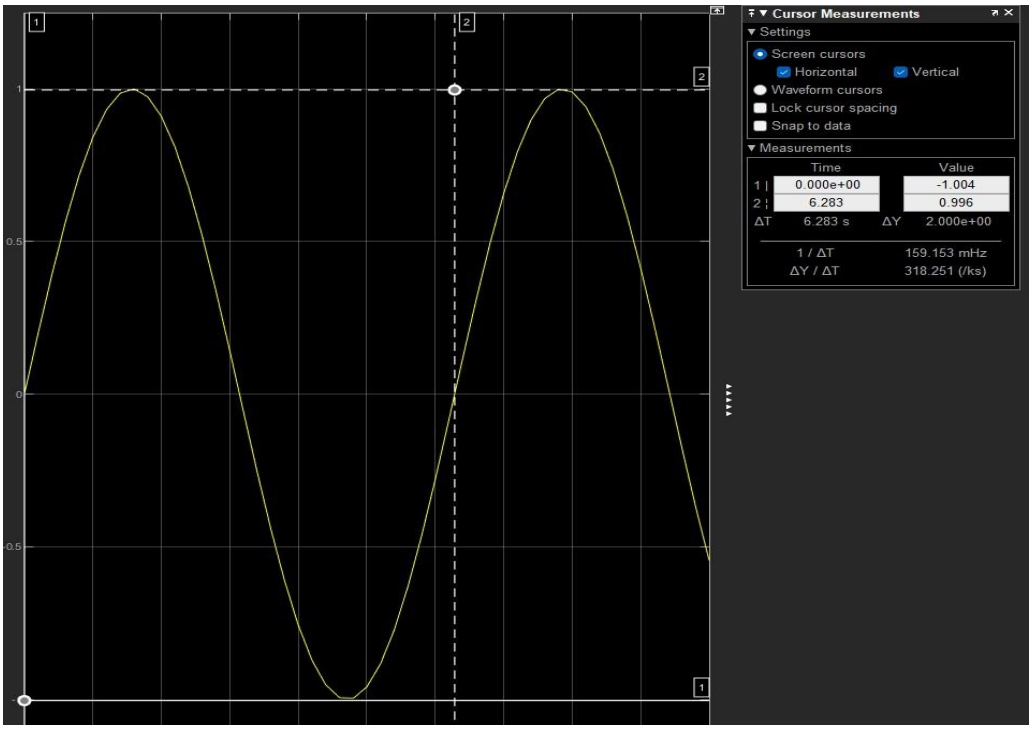


B. Amplitude (peak to peak) = 6

Periodic time = 159.153mHz

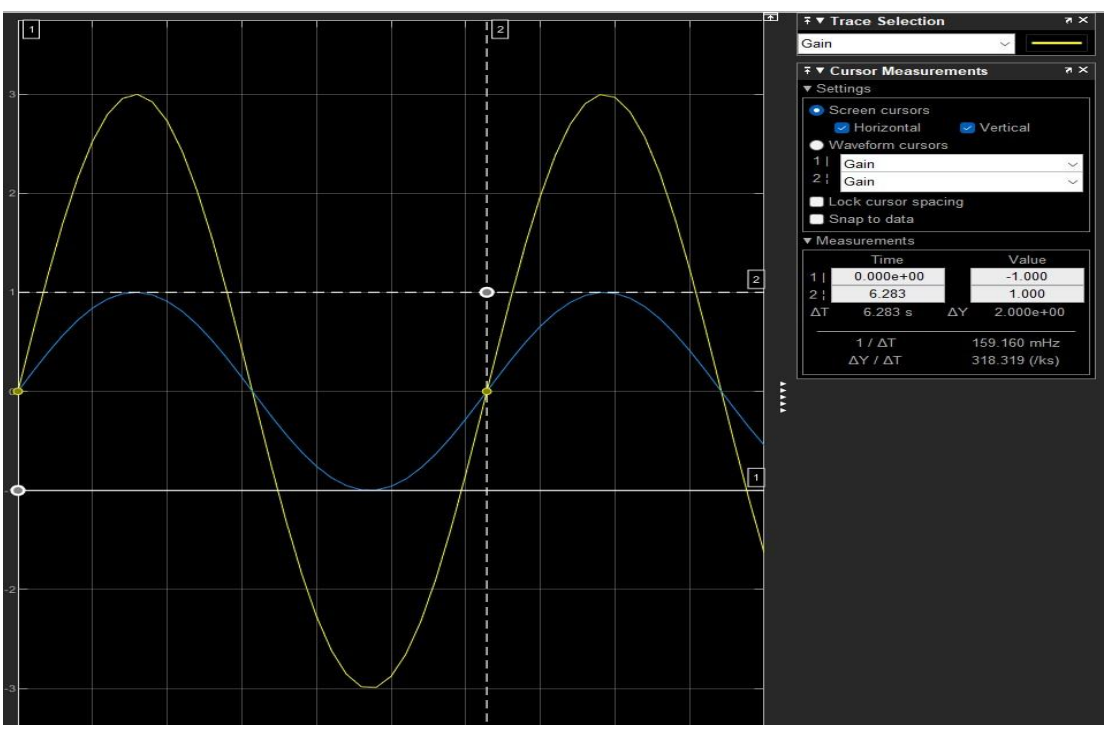

## OBSERVATIONS

***Part 02***

A.

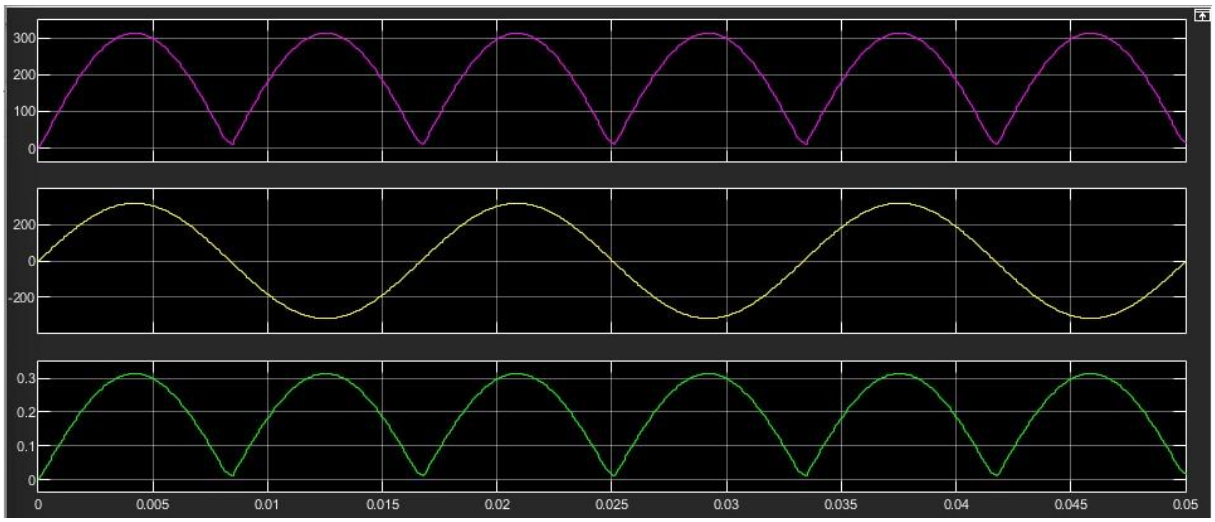


B.

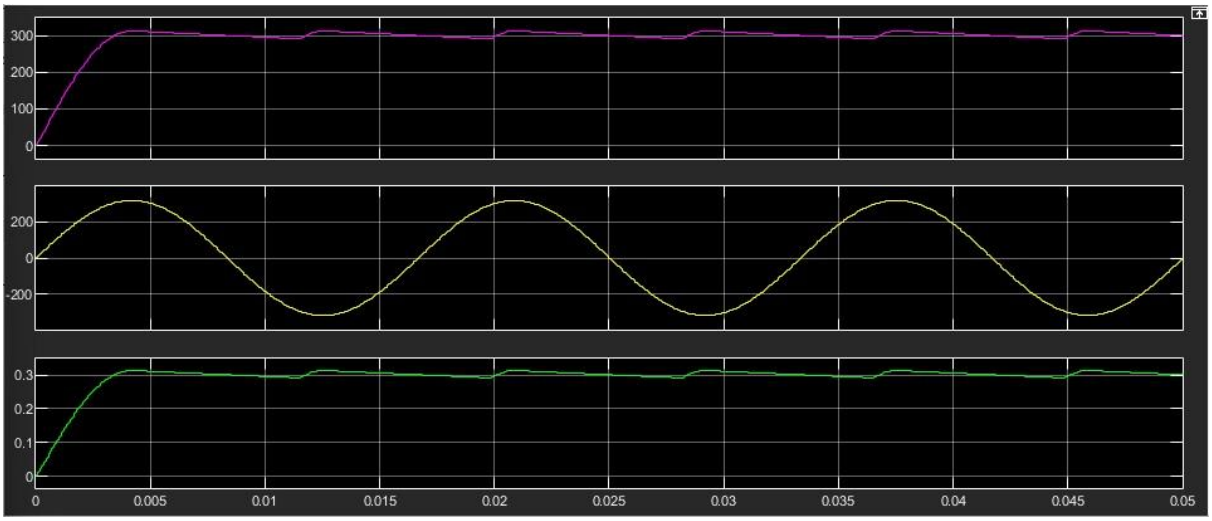


C.

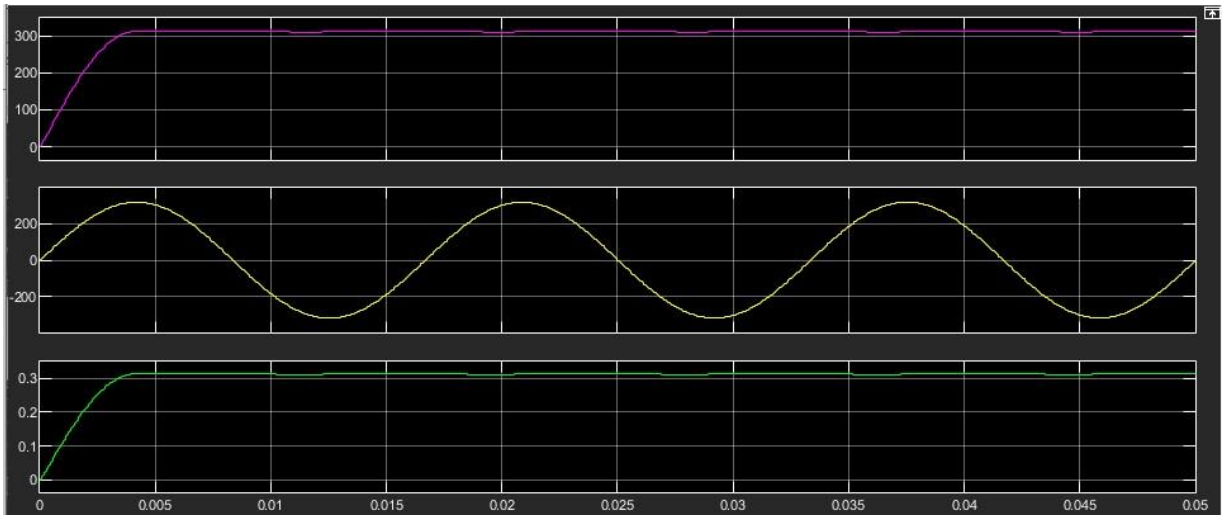

## CONCLUSION

The experiment demonstrated how MATLAB Simulink can effectively model and simulate systems using block diagrams. While initially challenging to locate appropriate tools and interpret the results, consistent practice made the process more manageable. Simulink, when integrated with MATLAB, proves to be highly efficient for developing and testing even complex systems. Although it demands a capable computer and time to master, its ability to simplify system design and address real-world problems makes it an invaluable tool for engineers and researchers.

## DISCUSSION

Simulink is a graphical computer programming environment where systems are depicted by interconnected blocks, which perform several mathematical and physical tasks. The blocks are specific types of functions to do some mathematics or logic, signal processing or other work and these blocks are connected to show the flow of data. This method is beneficial in system design and analysis since it enables the engineer to graphically build systems and then simulate them and in the long run be able to grasp the relationships between different aspects of the system. Because of the modularity of this tool, it is easy to divide the system into sub-systems thus making it easier to debug as well as helping the user to make iteration on the design with real time changes and tweaking of the system's characteristics. Simulink is used in almost all engineering disciplines including electrical engineering, mechanical engineering, aerospace engineering and control systems engineering where they use it in applications such as designing power electronics, modelling flight dynamics, and simulating dynamics of complex systems including robotic arms or vehicle suspensions. The benefits include simplicity of modeling allowing engineers to explore system response to different inputs without actual hardware, integration with MATLAB for analysis and scripting. Real-time testing is also possible with hardware-in-the-loop functionality implemented in Simulink, a broad set of libraries for utilizing minimal custom codes and mimics, and scalability to model both simple and complex multi-domain systems. Such characteristics make Simulink to be a comprehensive tool for designing, simulating and analyzing systems as well as enhancing the innovation and efficiency of the engineering processes.

A major issue which was realized during the completion of the practical was the ability to search for relevant blocks in Simulink. While using 'Library Browser,' there were plenty of ready components, but to define the best one at first was quite challenging. One of the most beneficial approaches was to use the search line in the browser to find blocks such as "Sine Wave" and "Scope." The other problem that emerged involved issues of connection between the components that needed to be well defined. Incorrect connections also led to wrong simulations and outputs most of the time. This problem was rectified by checking the terminal connections and comparing the simulation diagram to the intended design before the simulation was run. Another difficulty arising when analyzing simulation results was interpreting the results, especially extracting measurements from the waveform. Measurements for amplitude and time periods were made using the measurement cursors while cross reference instructions were used to enhance accuracy. These challenges, while being a bit tough, were good learning experiences and helped get a better understanding regarding the use of Simulink.

There are many benefits that come with using Simulink in system design since it is easy to use, and it makes system design easy using graphical display of all systems. It is implemented in both deterministic and stochastic models, which provides for the ability to simulate different systems. The integration of this software with MATLAB improves its performance since it allows for data analysis and mathematical computations from simulations. Also, the fact that most of these components are built in blocks rather than coded from scratch makes development very fast. Furthermore, Simulink can deal with nonlinear and multi-domain systems, which are the case in most of today's engineering practices. But we are not saying that Simulink is without its flaws. Large-scale, high-fidelity simulations require significant computational resources and are appropriate for less powerful machines. It also has high complexity, for a significant amount of time to remember the purpose of many blocks and tools. In addition, MATLAB and Simulink licenses costs are relatively high for an individual, a small organization, or people with a low budget. This experiment gave a good idea of what MATLAB Simulink is and its importance in modeling and simulating systems. The block diagram approach was therefore found to be an easy and efficient way of designing and analyzing systems. Some of the initial difficulties encountered included efforts in merely finding one's way around the library or in interpreting the results obtained that were also indicative that practice was essential. The capabilities and versatility of Simulink can be seen from the fact that it has a wide range of benefits for engineers as well as for researchers of different fields. Their potential to translate the theoretical knowledge into the actual application makes it useful to state-of-the-art engineering and system development.

**QUESTIONS AND ANSWERS**

1. Explain the concept of block diagram modeling in Simulink. How does it help in system design and analysis?

- Simulink block diagram modeling is the depiction of systems using blocks tied together; each block represents some part or operation of that system. This approach in system design and analysis is of special use since it overpoweringly shows the interaction between the parts. For example, the "Sine Wave" and "Scope" practical blocks will let one develop, in the simplest form, a model by means of which he will simulate signal behavior and experiment with it. Introducing dynamics in the values of the parameters and the observation of result in real-time make way for fast prototyping and optimization. The methodology relates the concept to practice; therefore, it is more tangible and tractable in addressing system performance.

2. In what engineering disciplines is Simulink commonly used, and what advantages does it offer in those applications?

- Because of its versatility and effectiveness, Simulink can be utilized in a record of fields. In electrical engineering, its application can be used in circuit design, power systems and control systems. In mechanical, Simulink is used to simulate a dynamic system of for instance vibration and thermal analysis. It is very useful in the aerospace field where it focuses on flight mechanics, control synthesis, and simulation of control relevant and real time. It is widely used in industries and educational institutions while performing the design and testing of controllers such as PID or state-space controllers. As a versatile tool for simulation of various domains in a single environment Simulink is used in intertwining fields of robotics where mechanical, electrical and control systems are interconnected.